# CURRENT TRANSDUCERS

## RMS CURRENT TRANSDUCER — *MODEL* MCTR

### 2-WIRE LOOP POWERED, TRUE RMS

## FEATURES

- Accurate RMS measurement of AC input
- 4-20mAdc 2-wire loop powered
- UL94V-0 Polyamide DIN-mount case
- Slim profile allows maximum use of available space
- Recessed terminals provide increased safety

## APPLICATIONS

- Designed for use with current transformers
- Use with any CT with 0.1A, 1A, 5A, or 0.333V output
- True RMS transducer for accurately sensing current in single and 3-phase installations.
- Ideal for non-sinusoidal applications

**ORDERING INFORMATION**
Example: 0-0.1A Input with
4-20mA Loop Powered Output.
**MCTR-0.100E2**

| INPUT AC CURRENT | STANDARD OUTPUT MODEL MCTR- |
|---|---|
| | 4-20mAdc |
| 0-0.1A | 0.100E2 |
| 0-1A | 001E2 |
| 0-5A | 005E2 |
| 0-0.333V | *0.333E2 |

*Note: 0.333V model requires isolation through CTs.

Transducer output is derived from the RMS value of the input.
DIN-rail lengths available: Consult Factory

## SPECIFICATIONS

**INPUT**
Current or Voltage ..... See Table
Frequency Range .... Standard ..... 50-60Hz
Burden ..... 0.1A &1A models ..... 0.05VA
5A models ..... 0.18VA
0.333V models ..... 0.004VA
Current Overload
Continuous ..... 1.5 X F.S. Rating
Transient (10s/hr) ..... 5 X F.S. Rating

**OUTPUT**
Scaling ..... 0-F.S. Input = 4-20mAdc Output
Response ..... (to 90%) ..... 300ms
Loading.. (@24Vdc. Instr. Pwr) ..... 0-500Ω
Set Point Adjustment ..... ±5% minimum

**DIELECTRIC TEST**
Input/Output ..... Current input models ..... 2220Vac
NOTE: 0.333V model requires isolation through the current transformer.

**INSTRUMENT POWER**
Loop-powered ..... Nominal ..... 24Vdc
Range ..... 15-35Vdc

**ACCURACY** (Includes effects of linearity and setpoint)
50/60Hz ..... 10-100% F.S. ..... ±0.25% F.S.
Output Ripple ..... <1.0% pk-pk

**TEMPERATURE**
Operating Range ..... -20°C to +60°C
Effect ..... ±1.0% F.S.

**PHYSICAL**
Termination Wire Size ..... 22 to 12 AWG
Weight ..... 0.4 Lb.
Unit can be mounted on ..... RAIL EN50035 (DIN 1) OR
RAIL EN5022 (DIN 2)

## CONNECTION DIAGRAMS

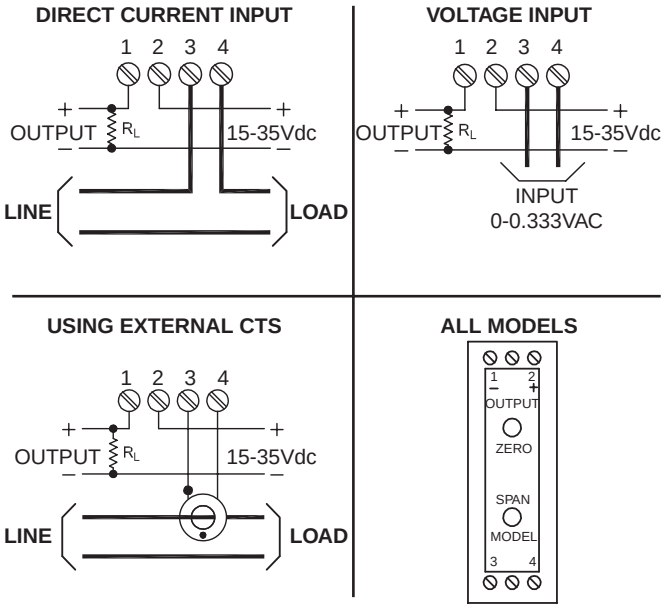


## DIMENSIONS

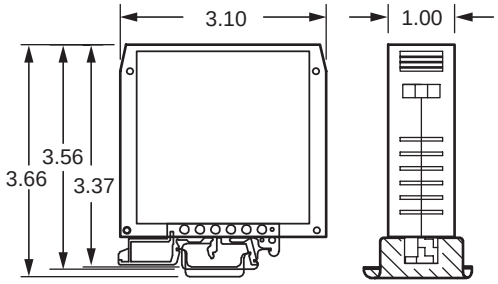


All Dimensions In Inches.

**FLEX-CORE®**
**Div. Morlan & Associates, Inc.**
4970 Scioto Darby Rd. Hilliard, Ohio 43026
**WWW.FLEX-CORE.COM**
sales@flex-core.com
**PHONE** (614) 889-6152
**TECH. ASSISTANCE** (614) 876-8308
**FAX #** (614) 876-8538